1

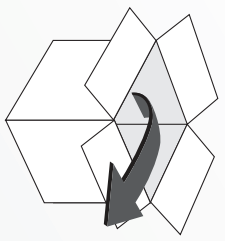

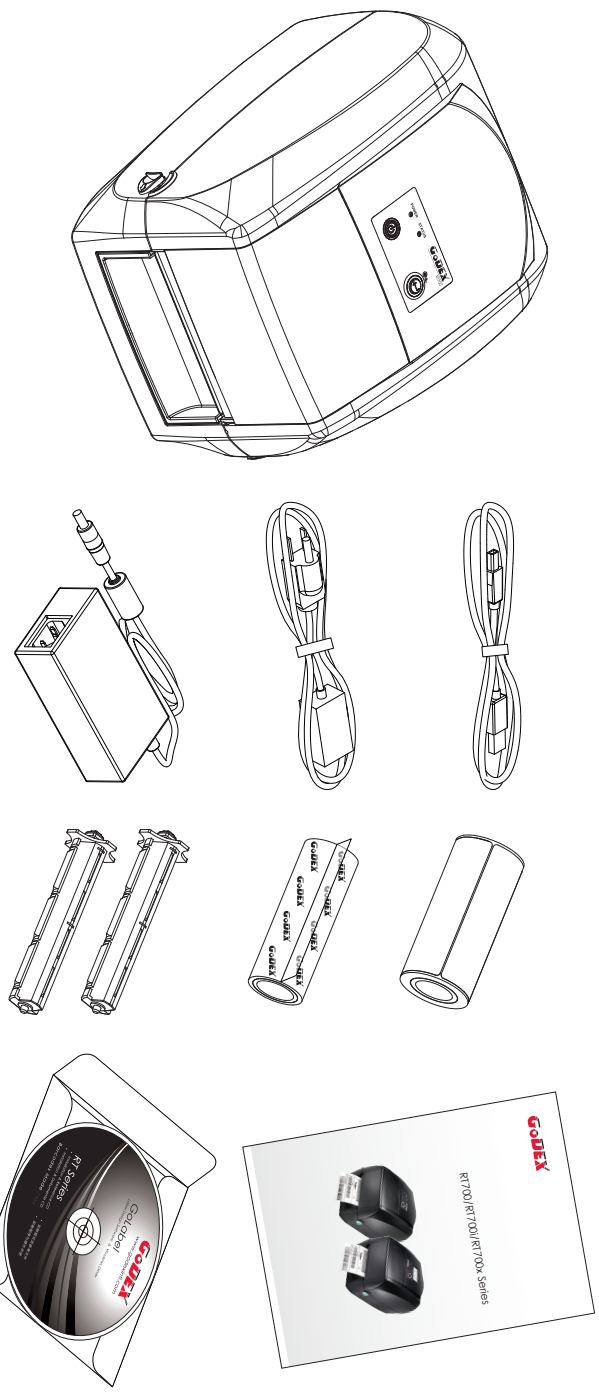

* Package content may vary per region.

2

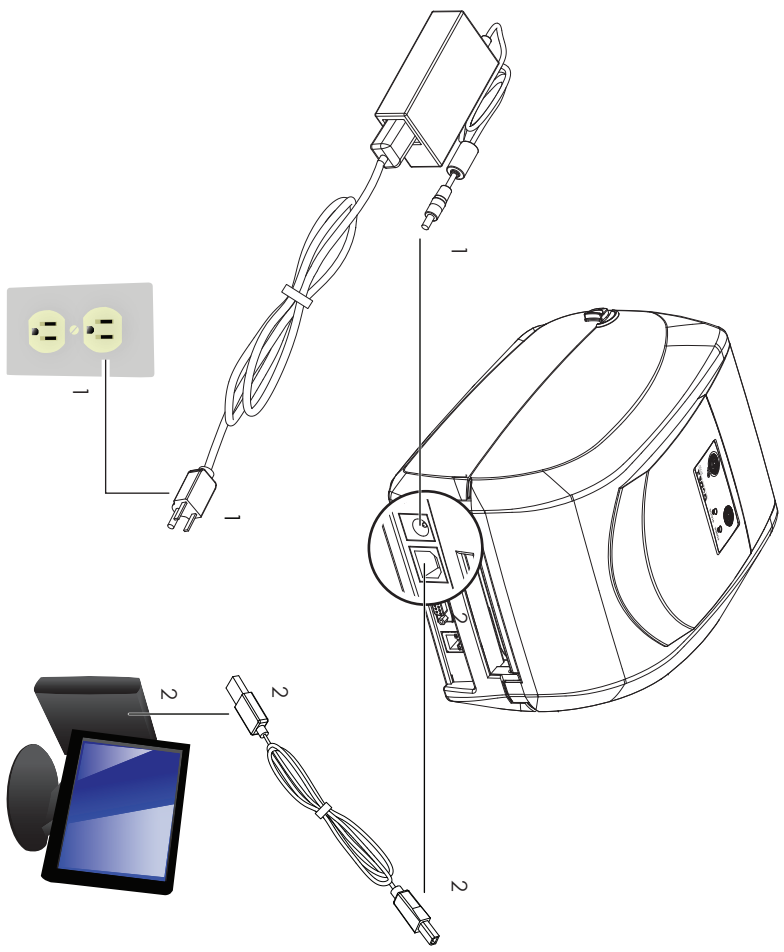

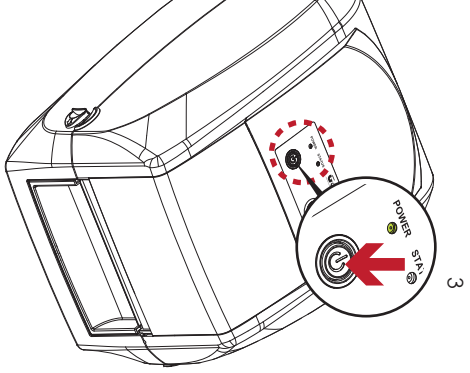

GoDEX

RT700/RT700i/RT700x Series Quick Guide
Ver.B
2018.05.04
317-025600-203

GoDEX

RT700/RT700i/RT700x Series

Barcodes Made Easy

www.godexintl.com

Godex International
infoGT@godexintl.com
+886-2-2225-8580

Godex Americas
infoGA@godexintl.com
+1-805-987-5100

Godex China
infoGC@godexintl.com
+86-21-5665-1313

Godex Europe
infoGE@godexintl.com
+49-2195-59599-0

3

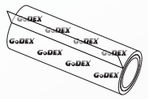

1

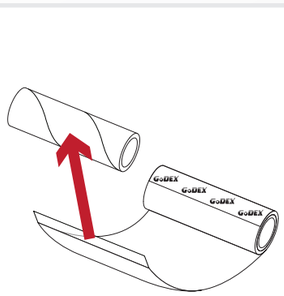

2

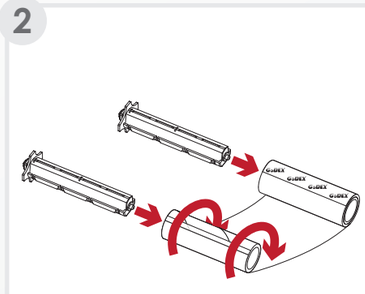

3

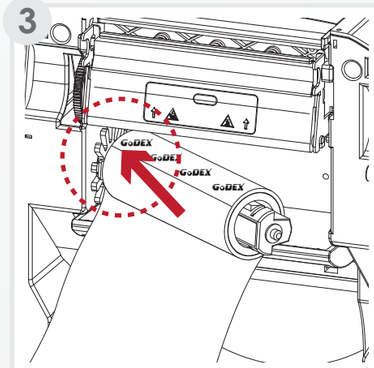

4

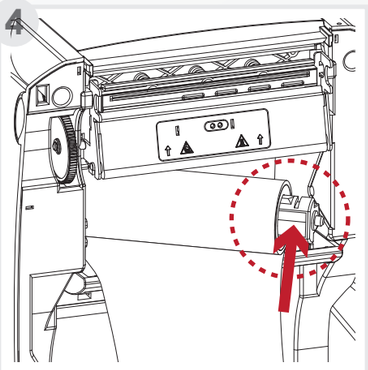

5

6

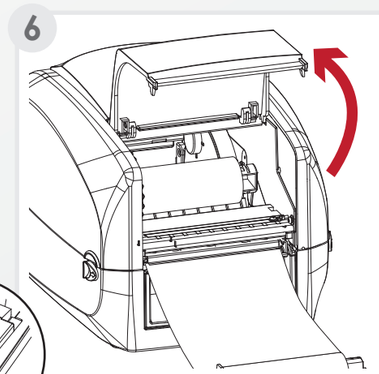

7

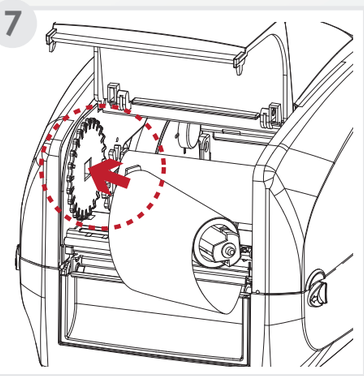

8

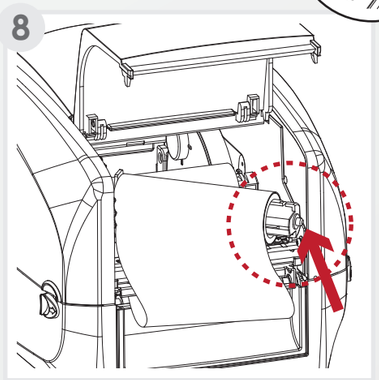

9

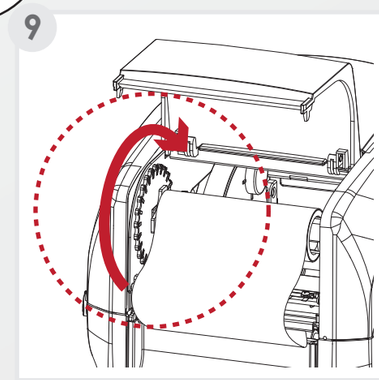

10

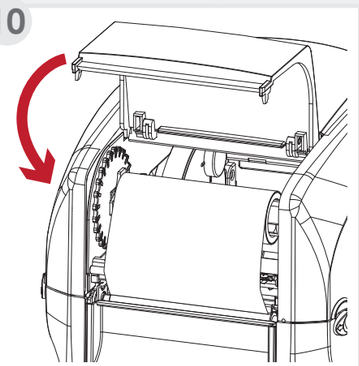

4

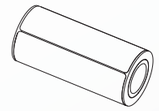

1

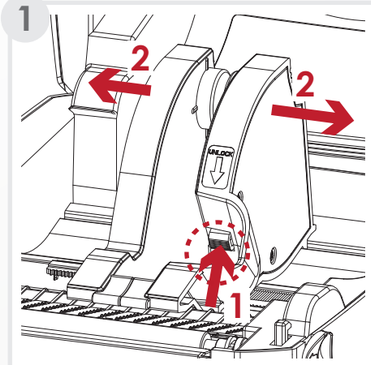

2

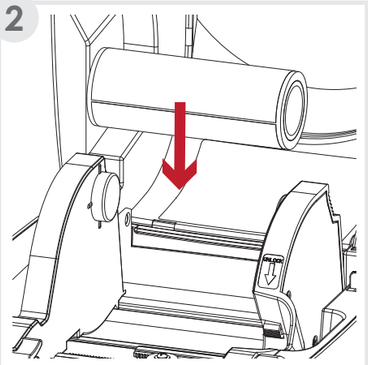

3

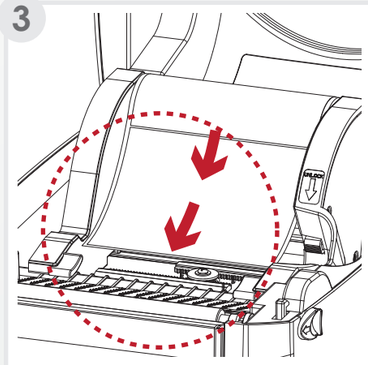

4

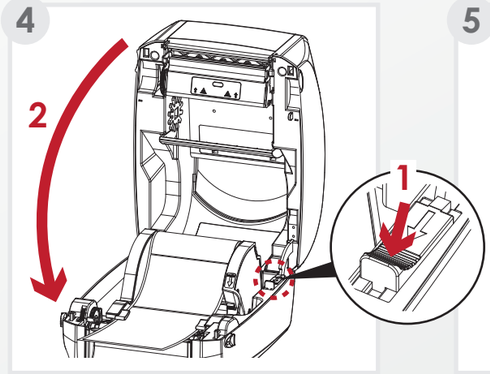

5

6

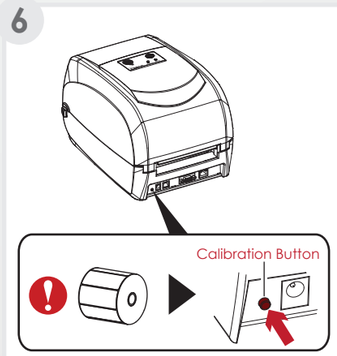

5

1

2

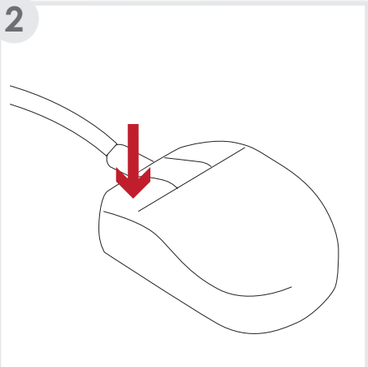
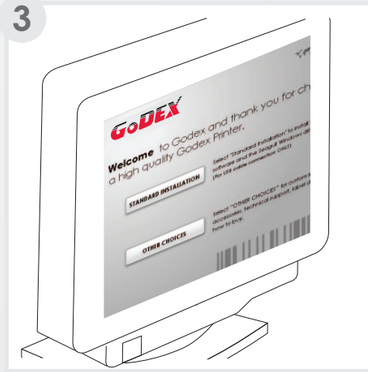
3